Yokis
URMET GROUP

MTC500E

Increase in power with several MTC500E

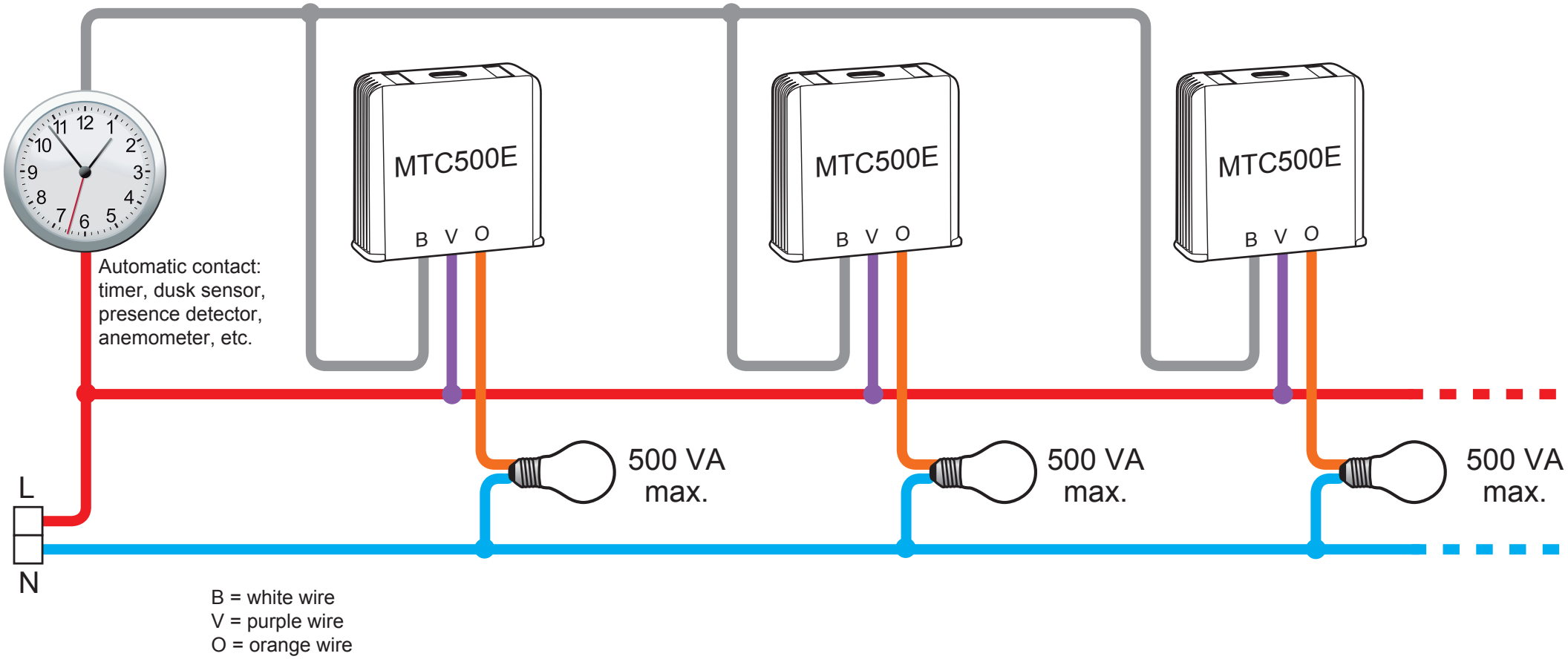

SD542-0517