Yokis
URMET GROUP

500 RANGE

Increase of switching power through flush-mounted 500 RANGE modules

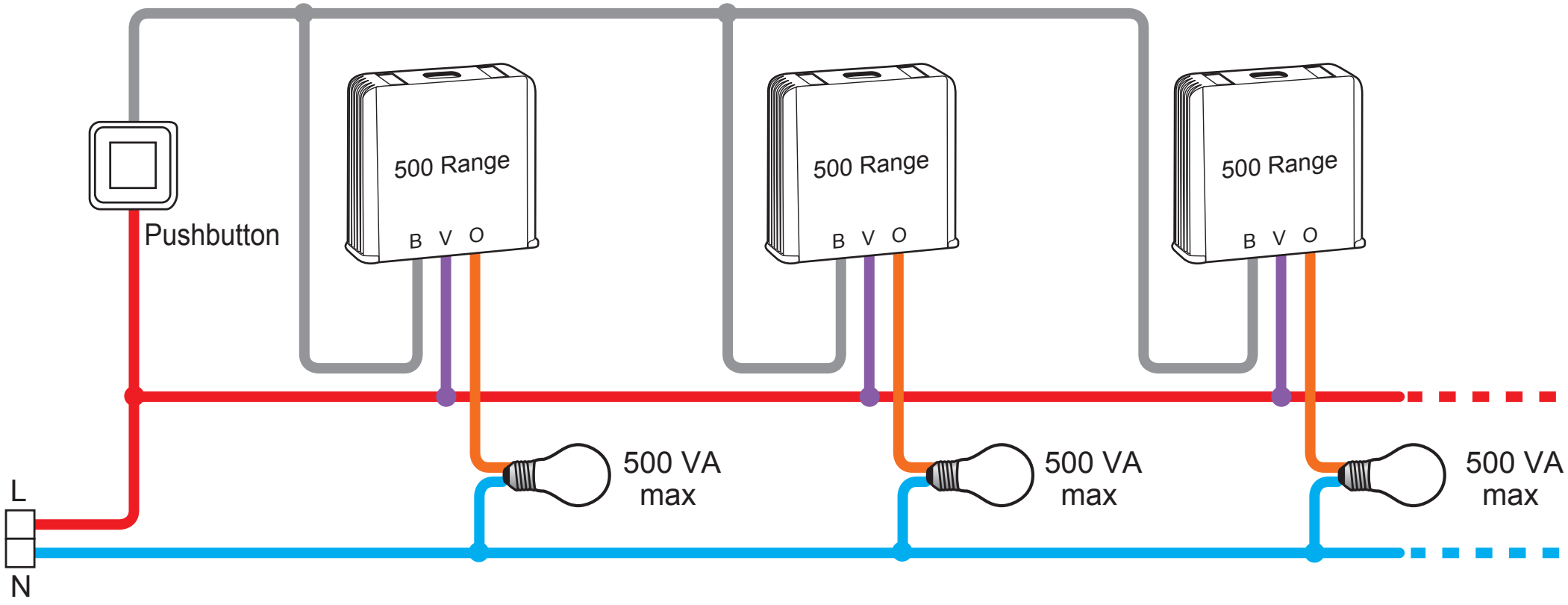

SD542-0005